FY-TECH

Owner's Manual

CE

FY-50L

The equipment is approved by following car manufacturers(China)

HONDA TOYOTA mazda NISSAN Ford

Contents

1、Safety Precautions Symbols 1
2、Symbols and Definitions 2
3、Accessories and Spare Parts List 3
4、Installation
1)、Specifications 4
2)、Duty Cycle and Overheating 5
3)、Machine Installation 6
4)、Selecting Location 7
5)、Connecting Input Power 8
5、Operation
1)、Controls 9
2)、Aluminium Welding Gun Application 10
3)、Steel Welding Gun Application 11
4)、Pulling Hammer Applicaction 12
5)、Operation 13
6)、Application for Glue Pulling Tools 14
7)、Cupules 15
6、Maintenance 16
7、Circuit diagram 17

Safety Precautions Symbols

Protect yourself and others from injury, read and follow these precautions before installation and operation.

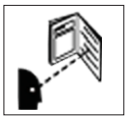

Read instructions.
1、Read owner's Manual before using or servicing unit。
2、Use only manufacturer' s supplied replacement。

Exploding parts can injure. Always wear a face shield and long sleeves。

Static can damage PC boards
1、Put on grounded wrist strap before handing boards or parts。
2、Use proper static-proof bags and boxes to store, move or ship PC boards。

1、Wear approved face shield or safety goggles with side shields。
2、Wear proper body protection to protect skin。

Flying metal can injure eyes。
1)Wear safety glasses with side shields or face shield。

1、Magnetic fields can affect pacemakers. Pacemaker wearers keep away.
2、Wearers should consult their doctor before going near plasma arc cutting operations。

Overuse can cause overheating
Allow cooling period ,follow rated duty cycle before starting to weld again.

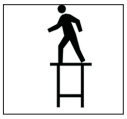

Do not weld in the height!

Electric shock can kill:
1、Do not touch live electrical parts。
2、Wear dry,hole-free insulating gloves and body protection.
3、Do not wrap electrical cable around your body.
4、Ground the workpiece with a good electrical ground。

Fumes and gases can be hazardous
welding produces fumes and gases. Breathing these fumes and gases can be hazardous to your health .
If inside,ventilate the area.
Do not weld in a confined space only if it is well ventilated.

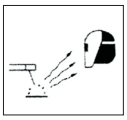

Eye protection for welding:

Current level in amperage	Minimum shade Number
30-150A	#8
150-300A	#10
300-500A	#12

The heat from the workpiece can cause serious burns。

Remove all flammables of the welding area.

Falling unit can cause injury.

Fire or explosion hazard.
Do not locate unit on,over,or near combustibe surfaces.Do not install unit near flammables.

Never cut on pressurized cylinder.

Protect yourself

Warn others

OK

OK

Factory safety!

Maintenance regularly!

Symbols and Definitions

Definitions

A Amperes	I_{1max} Rated maximum supply current	I On	% Percent
V Volts	I_{1eff} Maximum effective supply current	O Off	Increase
I_2 Rated welding current	IP Degree of protection	Protective earth (Ground)	Line connection
S_1 Power rating, product of voltage and current(KVA)	1~ Single phase	Do not do this	Loose shield cup
HZ Hertz	X Duty cycle	S Suitable for some hazardous locations	+ − Adjust air/gas pressure
U_1 Primary voltage	⎓ Direct current	Input	Automatic
U_0 Rated no load voltage(Aaverage)	Constant current	V Voltage input	Manual
U_2 Conventional load voltage	Temperature	Low air pressure light	

Accessories and Spare Parts List:

Welding gun	Aluminium two-stand crossbar lifter	Portable multi-hook puller	Pulling hammer with hook	Pneumatic cupule

Manual cupule	Pulling ring hook for pulling hammer	Φ5mm stud adapter	Φ4mm stud adapter	Φ5mm stud hook	Φ4mm stud hook

Φ5mm aluminium stud	Φ4mm aluminium stud	Φ6mm pulling ring	Φ4mm pulling ring	10A fuse	Tools

Φ6mm pulling screw	Φ4mm pulling screw	Tool box	Polisher			

Remark:

1)、Optionnal orders for above accessories and components are available.

2)、Model and parts number required when ordering parts from your local distributor.

Installation

1、specifications

Model / Parameters	FY-50L
Input voltage	AC 220V
Phases	Single-phase
Frequency	50/60Hz
Input Current	2.0A
Fuse	4A
Insulation grade	H grade
Capacitance	66000 UF
Charging voltage	50-150V
Stud diameter	Φ3-Φ6mm
Duty cycle	80%
Dimensions	530X600X1640mm
Weight	12/20kg

2、Duty Cycle and Overheating

Duty cycle is percentage of 10 minutes that unit can weld at rated load without overheating.

If unit overheat,output stops ,and cooling fan runs .Wait fifteen minutes for unit to cool.Reduce amperage or duty cycle before welding.

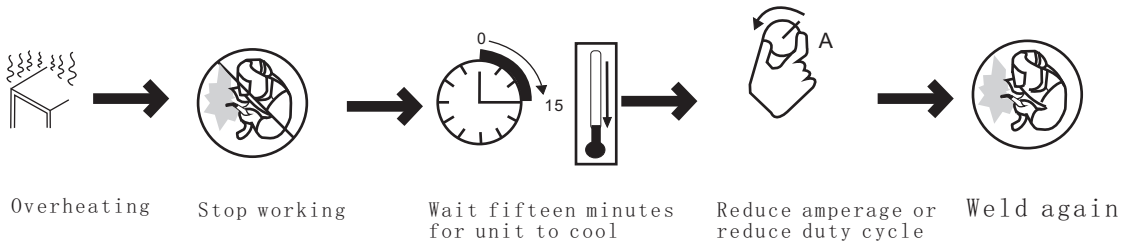

3、Machine Installation

1)Open the package and find out the owner's manual。

2)Check the supplied accessories according to packing list that attached to this manual.

3)Properly install this equipment as following diagram.Inspect the unit for any problems.If so,contact your local distributor or service agency.To locate a distributor or service agency.

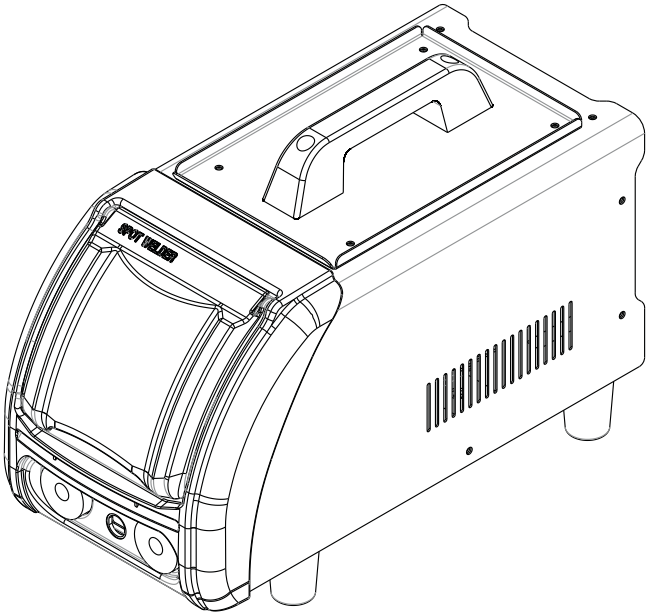

4、Selecting a Location

1) Select a correct location to place the unit.

2) Determine input power cord length according to its actual operation requirement . Make sure that the supply cable is at least 6mm² in diameter

3) Do not move or operate unit where it could tip.

4) Use cart or unit handle to move unit . Do not pull the cords to move unit.

5、Connecting Input Power

The power supply must have a ground connection.
The welder must also be connected to circuit breaker.

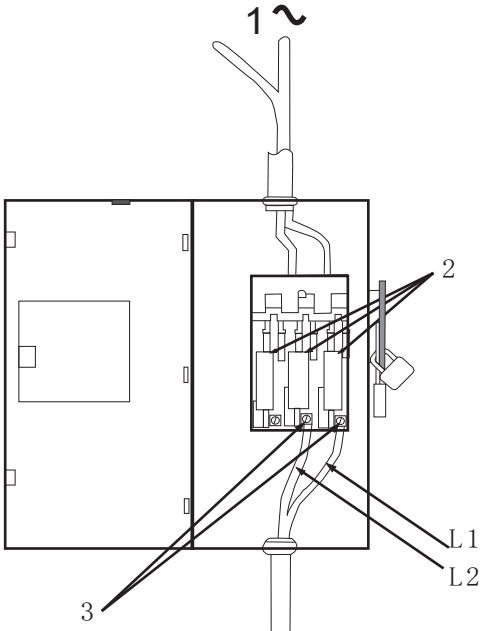

1、Input power cord (not less than 6mm² copper cord).
2、Over-current protection.
3、Disconnect device line terminals.
4、Ground wire L1/L2 input conductors.

- Power connection and installation must meet all National and Local standards(Circuit breaker must be installed).Only qualified persons are allowed to make this installation.
- Disconnect and lockout/tagount input power before connecting input conductors from unit.
- Select type and size of over-current protection.
- Close and secure door on disconnect device . Remove lockout/tagout device,and place switch in the "on" position.

The power supply must have a ground connection.
The welder must also be connected to circuit breaker.

1

The machine must be grounded(earthed) properly to prevent accidental electrical shock.

If you need to open the machine case(after work every day,make sure to turn off the external power source and turn off the power switch on the machine.

4

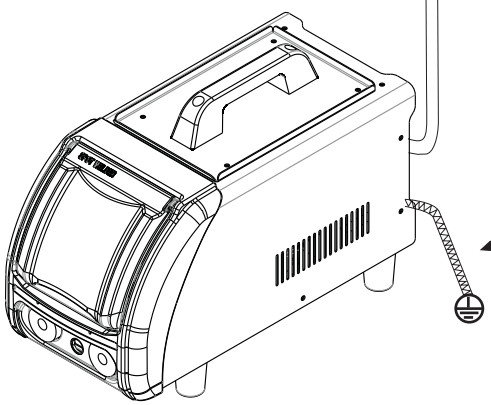

Operation

1. Controls

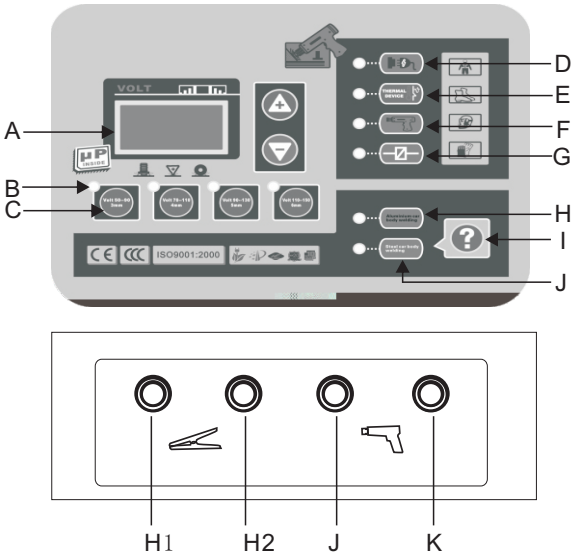

A. Voltage display
B. Voltage indicator
C. Voltage selector
D. Power indicator
E. Overheat indicator
F. Gun trigger indicator
G. Over-voltage indicator
H. Aluminium selected indicator
I. Aluminium & Steel selection
J. Steel selected indicator
H1/H2. Earth cable
J/K. Gun cable

It is easy and simple to operate the stud welder even though you have no relevant experience. Firstly, you could turn the main power switch to the “on” position and adjust the current according to relevant stud diameters. Put the chosen stud into the gun, then the welding process could be started. The greases of the workpiece surface should be cleared every time before welding to avoid poor contact. It has a little welding spatter, please wear glasses and gloves.

You could get the best result by connecting H1 and H2 with both edges of the workpiece surface for large area welding (you could choose either H1 or H2 for small area welding).

Weld metallic stud or post form components in sheet metal.

The diameter of studs is 3mm-6mm. The welder is based on stud welding technology. It has advantages as high efficiency, low heat emission for workpiece surface, quality weld appearance, firm welded joint and low energy consumption. It could save your time and materials with excellent weld quality (great strength, no distortion, no leakage),easy and simple operation without complicated procedures such as drilling holes, riveting, welding and polishing…etc.The resistance heat is extensively used in welding field, suitable for welding of various metallic materials such as magnetism copper, stainless steel, copper, aluminum, aluminum alloy, etc.

Please read this instruction manual before use .

3. Steel Welding Gun and Adaptors

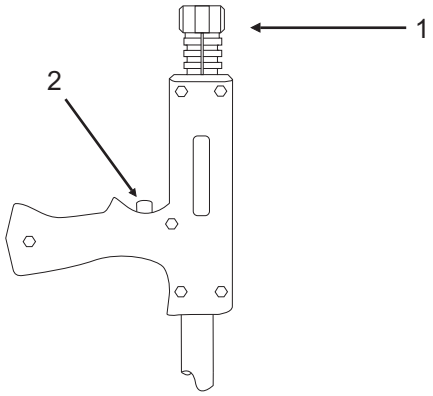

1、Electrode holder

2、Trigger

Single-Sided applications

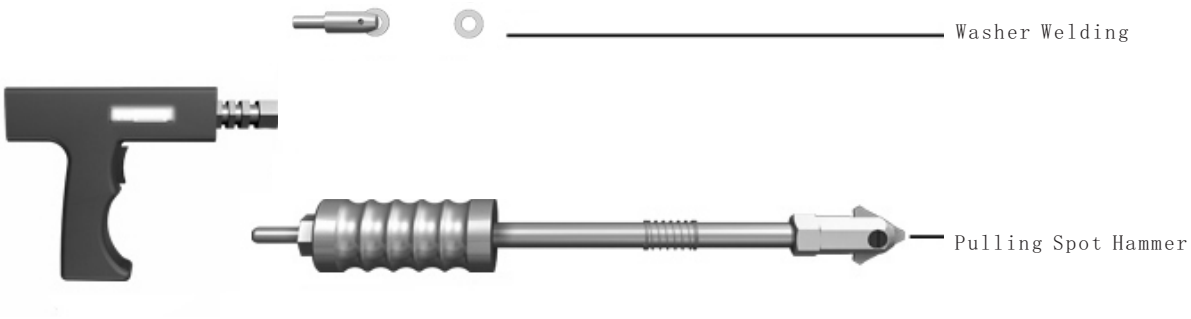

4. Pulling Hammer Application

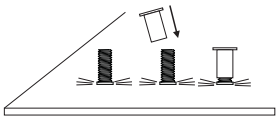

Weld the studs to the dent area of car body. Put the corresponding pulling screw on the studs and tighten up.

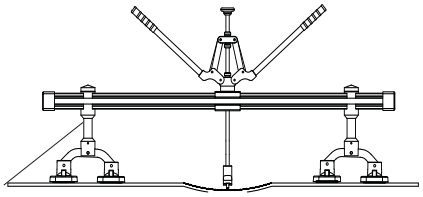

Choose crossbar lifter: Make sure the crossbar lifter with pulling hook is fixed on the car body. Connect the pulling hook to the pulling screw. Adjust the adjusting screw of the crossbar lifter. Squeeze the lever to pull out the dent.

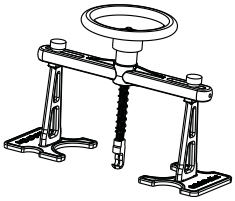

Choose quick puller: Make sure the quick puller with pulling hook is fixed on the car body. Connect the pulling hook to the pulling screw. Adjust the adjusting screw of the quick puller. Rotate the wheel to pull out the dent.

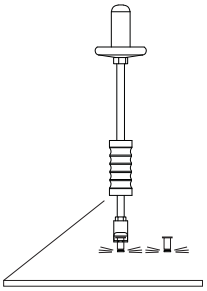

Choose pulling hammer: Connect corresponding pulling hook to the pulling screw. Slide the hammer to opposite direction to pull out the dent.

A variety of pulling hooks are available to fit crossbar lifter and pulling hammer.

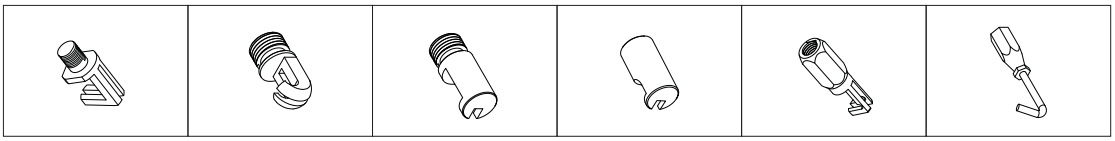

Remark:

1、Setting amperage too high or time too long can cause workpiece surface (vehicle body)damage . Please weld other workpieces for practice before actual operations.

2、Setting correct amperage and time according to the workpiece thickness.

3、According to actual conditions to select a suitable puller for repairing

4、The nut of the puller is to adjust the up and down moving range of the main axle

5、Continuing another operation is available after this procedure finished .If not ,please shut off the main power supply and switch off the unit.

5、Operation

Triangle Washer Welding

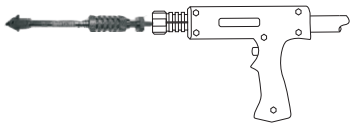

Connect washer adaptor with welding gun and tighten, Install washer.

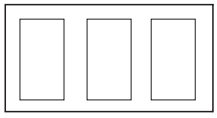

Set correct voltage according to thickness of the panel

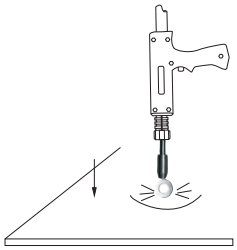

Approximately a 90° angle to the dent. Put on pressure and press trigger.

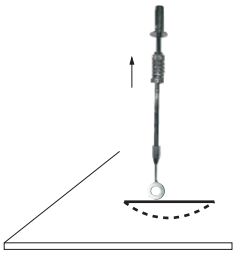

Remove welding gun. Hook the washer with pull hammer. Slide the hammer to opposite direction to pull out the dent.

Remark:

1、Setting amperage too high or time too long can cause workpiece surface (vehicle body) damage . Please weld other workpieces for practice before actual operations.

2、Setting correct amperage and time according to the workpiece thickness.

3、Continuing another operation is applicable after these procedures finished . if not, please shut off the main power supply and switch off the unit.

6. Application for glue pulling tools

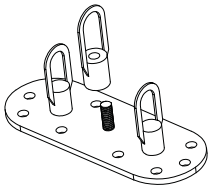

Tighten the corresponding pulling ring to the pulling plate.

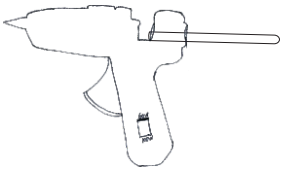

Insert the glue stick to the gun. Make sure the glue stick is seated properly..

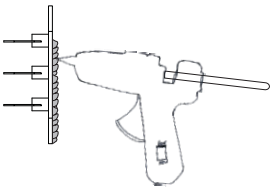

Connect power supply to the gun, and point to the back side of pulling plate. Push trigger switch (according to operation, select power 60W or 100W) to squeeze out the glue to the plate.

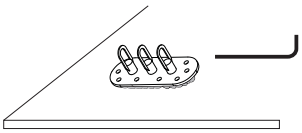

Stick the glued pulling plate (the back side must be full of glue) to the dent area of car body which should be polished and cleaned. Insert a metal rod through the pulling ring.

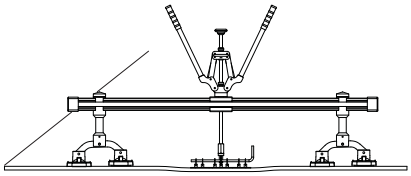

Choose crossbar lifter: Make sure the crossbar lifter with pulling hook is fixed on the car body. Connect the pulling hook to the pulling plate. Adjust the adjusting screw of the crossbar lifter. Squeeze the lever to pull out the dent.

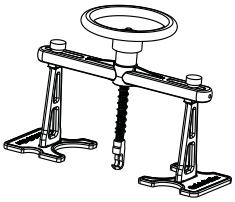

Choose quick puller: Make sure the quick puller with pulling hook is fixed on the car body. Connect the pulling hook to the pulling screw. Adjust the adjusting screw of the quick puller. Rotate the wheel to pull out the dent.

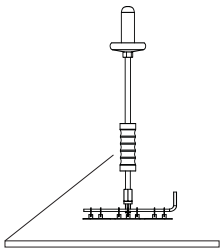

Choose pulling hammer: Connect corresponding pulling hook to the pulling plate. Slide the hammer to opposite direction to pull out the dent.

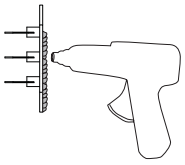

After pulling out the dent, use a hot air blow gun pointing the hot air to pulling plate to remove the glue from car body.

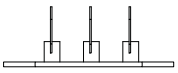

Clean the pulling plate for next use.

Remark:

1、Setting amperage too high or time too long can cause workpiece surface (vehicle body)damage . Please weld other workpieces for practice before actual operations.

2、Setting correct amperage and time according to the workpiece thickness.

3、According to actual conditions to select a suitable puller for repairing

4、The nut of the puller is to adjust the up and down moving range of the main axle

5、Continuing another operation is available after this procedure finished .If not ,please shut off the main power supply and switch off the unit.

7、Cupules

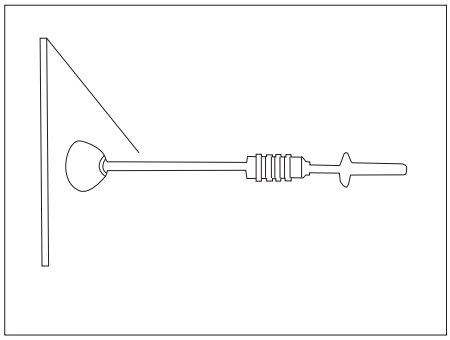

Manual operating cupule:

1、Connect manual cupule with pull hammer.
2、Push manual cupule in to lock the cupule on the dent.
3、Slide the hammer to opposite direction to pull the dent out.

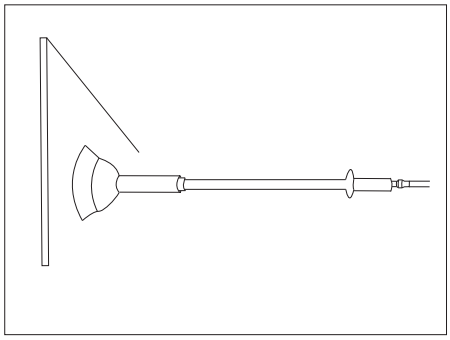

Pneumatic vacuum cupule:

1、Connect gas/air supply with the adaptor of cupule.
2、Open the valve ,sticking cupule to the dent.
3、Slide the hammer to opposite direction pull the dent out.
4、Cupule falls off when close the valve.

Maintenance

1、Troubleshooting

Trouble	Reason	Remedy
No welding output	(1)Connected power supply incorrectly. (2)Power switch in "off" position	(1) Connect power supply according to manufacturer' s instructions. (2) Place power switch in "on" position.
Trigger not working	(1) Trigger damaged. (2) Gun control wire broken. (3) Control wire plug loosen. (4)Mode switch in incorrect position.	(1) Replace trigger. (2) Connect again or replace if necessary. (3)Connect control wire plug again. (4)Place Mode switch in correct position.
Poor weld	(1)Aamperage too low . (2)Weld time too short. (3)Input power cord did not meet the requirement. (4)Ground clamp bad contact.	(1)Increase amperage setting. (2)Increase time setting. (3)Replace input power cord. (4)Change ground clamp location.
Piercing workpiece	(1)Output amperage too high. (2)Weld time too long. (3) Bad contact of electrode tip or washer with workpiece.	(1)Reduce amperage setting. (2)Rrduce weld time. (3)Remove coating from material reduce added pressure.
Welder stop working while operation	(1)Trigger plug loosen. (2)Gun control wire broken. (3)Over heating.	(1)Check gun control wire and trigger plug. (2)Wait for temperature cool down.
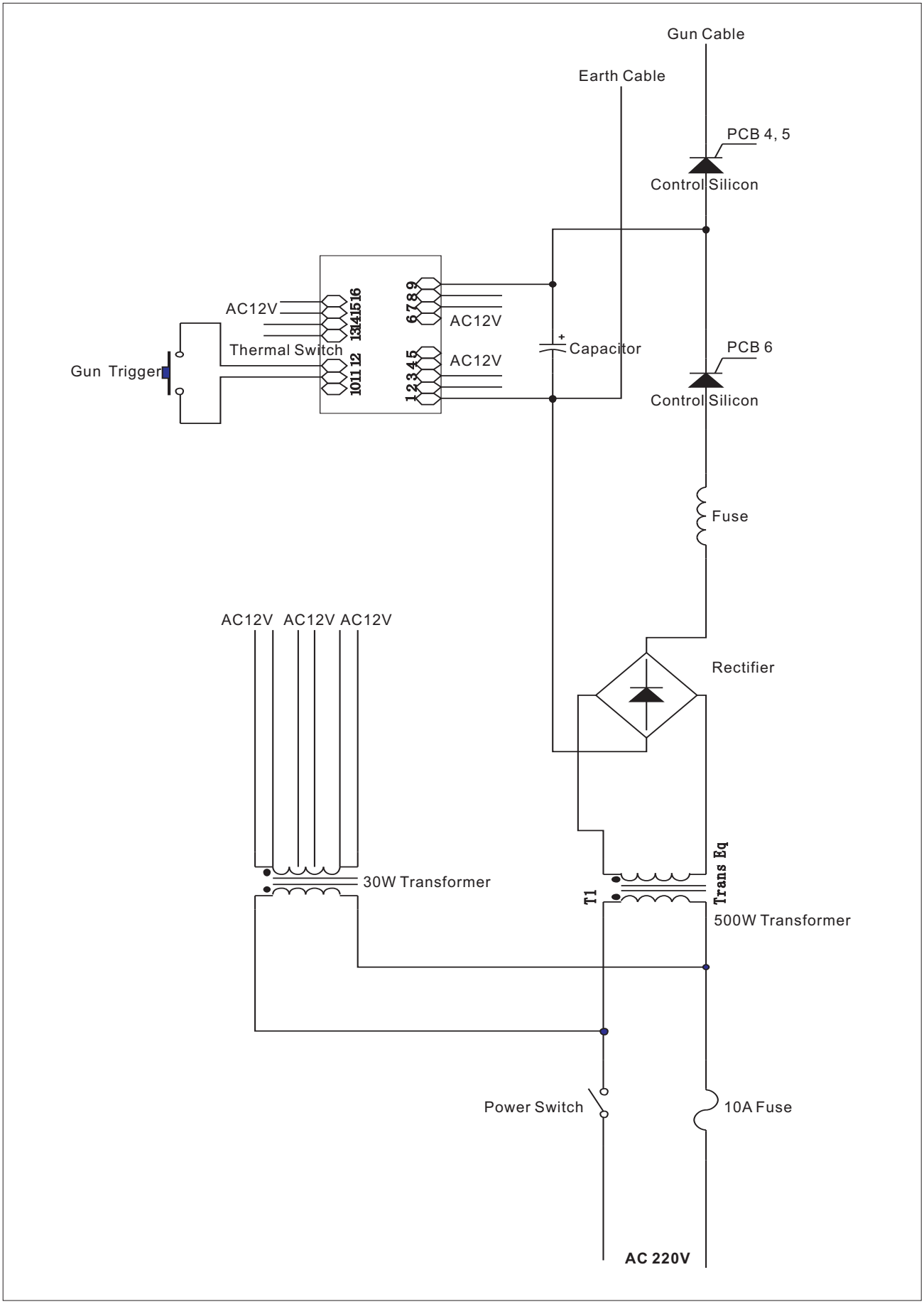
Circuit Diagram