FY-TECH

Instruction Manual

CE

FYMIG5215X

Our equipment is approved by the following car manufacturers（China）

HONDA TOYOTA mazda NISSAN Ford

CONTENTS

1. Safety Precautions Symbols 1
2. Symbols and Descriptions 2
3. Installation
   3.1 Specifications 3
   3.2 Duty Cycle and Overheating 4
   3.3 Machine Installation 5
   3.4 Selecting a Location 6
   3.5 Installing Gas Supply 7
   3.6 Connecting Input Power 8
   3.7 Threading Welding Wire 9
   3.8 Changing Drive Roll 10
   3.9 Typical MIG Process Connection 11
   3.10 Welding Gun 12
4. Operation
   4.1 Controls 13
   4.2 Holding and Positioning Welding Gun 14
   4.3 Conditions that Affect Weld Bead Shape 15
   4.4 Gun Movement during Welding 16
   4.5 Poor Weld Bead Characteristics 17
   4.6 Good Weld Bead Characteristics 18
5. Troubleshooting
   5.1 Excessive Spatter 19
   5.2 Porosity 20
   5.3 Excess Penetration 21
   5.4 Lack of Penetration 22
   5.5 Incomplete Fusion 23
   5.6 Burn through 24
   5.7 Waviness of Bead 25
   5.8 Distortion 26
   5.9 Other Troubleshooting 27

Preface

Please read this instruction manual carefully before using and the equipment and refer to it as needed to ensure the continued safe operation of the equipment.

▲This instruction manual should be read completely before attempting to use or service the equipment. Failure to follow the instructions in this manual could result in property damage, severe personal injury, or death.

▲The following warnings and important notices are used in the instruction manual:

Improper use of this equipment can cause serious or fatal injury	WARNING: Improper use of this equipment can cause personal injury or property property damage

DANGER

Improper use of this equipment can cause serious or fatal injury

- Magnetic fields can affect pacemakers. Pacemaker wearers keep away from the equipment. Wearers should consult their doctor before going near equipment operations.
- Do not touch any live electrical parts. Wear dry, hole-free insulating gloves and body protection. The input power circuit and machine internal circuit are live with high voltage when power is on. Touching live electrical parts can cause fatal shocks or severe burns. High voltage exists in the power supply socket. Never touch the conductor terminals with bare hand.
- Input power installation must meet national standard. All electrical connections must be made by a qualified electrician. Insulated gloves and shoes must be worn when connecting input power or maintaining equipment.
- Never disassemble, repair, alter or rebuild the equipment without approval from the manufacturer. There is a risk for electrical shock and fire.
- Electric shock can kill. Properly ground this equipment according to its user manual and national standard.
- Make sure the supply cable is up to national standard or local code.Use only the right gauge of electrical wire/cable.There is a risk of fire or electrical shock if overload building wiring-be sure power supply system is properly sized,rated and protected to handle this unit.
- Replace power cord/wire/cable immediately-bare wiring can kill.
- Do not step on, twist or pull the power cord..
- Frequently inspect input power cord and regularly clean the unit to remove dust and dirt.Any worn or damaged power cord or internal components in heavy dust may cause electrical shock, short circuit or fire.
- In the event of abnormal, operation must be immediately stopped. If smoke, smell or abnormal noise is produced by the unit, disconnect the power cord immediately and contact your local dealer. Do not use it until the problem is fixed.
- Do not operate or place the device near water or in wet locations. Risk for electrical shock or damage to the device.
- Do not operate the equipment in potential hazardous areas : chemicals, oil, gas and mining, or the worksites where power supply system is in poor condition.
- Hot parts can cause severe burns.Do not touch workpieces or metallic parts of torch with bare hands during or after welding.Allow cooling period and use a proper tools or wear welding gloves to handle hot parts to prevent burns.
- Use only well-maintained device. Inspect and maintain the device for safety every 12 months, including cleaning and removing dust. Repair or replace damaged parts/cables at once.
- Follow the installation and operation instruction to ensure user safety and proper equipment performance. It is the responsibility of the owner to ensure that the equipment has been installed and operated as specified in the instructions provided. The manufacturer takes no responsibility for any loss or damage suffered as a result of using the equipment incorrectly or improperly.

WARNING

Improper use of this equipment can cause personal injury or property property damage

The equipment is designed for welding of metals only. Do not use the equipment for other purposes. This may cause fire or electrical shock

Never place any materials/objects on top of the equipment to avoid fire and electrical shock.Do not locate equipment on,over,or near combustibles in worksite. The flying sparks can cause fires and burns.Do not weld where flying sparks can strike flammable material.

Read instruction manual before using equipment. Use only the spare parts supplied or approved by manufacturer.

Keep away from moving parts such as fans. Moving fans cause injury when changing welding wire.

Moving wire feed rollers and spools can cause injury when changing welding wire.

Keep your hand away from the opening of the welding torch when the torch trigger is pressed. The wire coming out from torch will cause injury of hands.

Overuse can cause overheating.Avoid overuse of the equipment which can cause components to overheat and equipment to shorter life.

Make sure gas bottle and gas regulator are in good conditions. It may cause explosion if the gas bottle or regulator is damaged.

Follow the installation and operation instruction to ensure user safety and proper equipment performance. It is the responsibility of the owner to ensure that the equipment has been installed and operated as specified in the instructions provided. The manufacturer takes no responsibility for any loss or damage suffered as a result of using the equipment incorrectly or improperly.

NOTE

- The equipment must be used by qualified personnel familiar with electronic equipment.
- Do not place the equipment on unstable or uneven ground. The equipment might fall causing injuries and damage to the equipment.
  During operation process, the equipment should keep a distance about 10cm from the wall to keep air way clear.
- Avoid using the equipment in the environments with high humidity（above 90%）, high temperature（above 40℃),low temperature(below5℃), high frequency source nearby, chemical and drug, water vapor for condensation, dust or vibration.
- Make sure the facility supply voltage and frequency are the same as shown on name plate. The supply cable must be properly sized and rated.
- The connection between the main power supply and the equipment should be as short as possible.
- Use a dry cloth to clean the dirt on the equipment.
- Do not forget to take back all repair tools/objects inside the equipment after repair/ maintenance, such as screws, bolts or nuts. The left out metallic objects inside the equipment can cause damage to the equipment.
- Follow the instructions of this user manual to operate the equipment.
- We have made installation and operation quick and easy. Please operate the buttons and switches gently with your hands, only one button each time. The sensitive control circuit will be damaged if pressing the buttons with a hard and sharp thing such as screw driver and, pen.
- Turn off all equipment when not in use.
- Follow the installation and operation instruction to ensure user safety and proper equipment performance. It is the responsibility of the owner to ensure that the equipment has been installed and operated as specified in the instructions provided. The manufacturer takes no responsibility for any loss or damage suffered as a result of using the equipment incorrectly or improperly.

2. SYMBOLS AND DESCRIPTIONS

Symbols and Definitions

A	Amperes		Gas Metal Arc Welding (GMAW) Gun	I	On	%	Percent
V	Volts		Wire Feed	O	Off		Increase
I_2	Rated Welding Current	IP	Degree of Protection		Protective Earth (Ground)		Line Connection
S_1	Power Rating, Products of Voltage and Current	1~	Single Phase		No / Do Not Do This		Loose Shield Cup
HZ	Hertz	X	Duty Cycle		Gas Input		Adjust Air/Gas Pressure
U_1	Primary Voltage		Direct Current		Gas Output		Do Not Switch While Welding
U_0	Rated No Load Voltage (Average)		Constant Current		Input		Wire Feed Spool Gun
U_2	Conventional Load Voltage		Temperature		Voltage Input		

Description:

Our semi-automatic welder is an all-in-one MIG shielding gases welder (GMAW) with high efficiency that is an ideal substitute for manual arc welding. Most advanced circuit design and technology are adopted. Excellent performances, supreme reliability, quality welding requirements can be satisfied. Spot weld, groove weld, and fillet weld are available. Most commonly used shielding gases are applicable such as Co2, AR, CO2+AR, CO2+O, etc. Suitable for welding of various metallic materials such as mild steel, low carbon steel, low alloy steel, stainless steel, steel, iron, copper, aluminum, nicket, etc. Extensively used in the welding and field operation of oil pipeline, chemical, car fabrication, shipyard, etc.

3. INSTALLATION

3.1 Specifications

Model	FYMIG5215X
Input Voltage (V)	AC 380 Three Phase
Frequency (Hz)	50/60
Rated Input Current (A)	8.0
Rated Output Current (A)	12
Output Voltage (V)	260
No-load Voltage (V)	15.7-30
Welding Wire Diameter (mm)	50
Duty Cycle	0.6, 0.8, 0.9, 1.0
Insulation Class	65%
Type	F
Dimensions (mm)	1050*520*930

3.4 Selecting a Location

1. Select a correct location to place the unit.

2. Determine input power cord length according to its actual operation requirement. Input power cord must have a minimum inside diameter of 6mm2.

3. Do not move or operate unit where it could tip.

4. Use cart or unit handle to move unit. Do not pull the cords to move unit.

5. Moving gas cylinder and main unit to hight sparaely.Use lifting eye to lift unit only, not running gear, gas cylinders, or any other accessories.

6. Optional order for individual wire feeder is available. The wire fe eder and welding gun divide from the main unit.It is more convenient to operate.

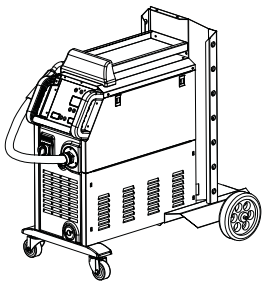

3.5 Installing Gas Supply

1. Cap
2. Cylinder valve (Remove cap, stand to side of valve, and open valve slightly. Gas flow blows dust and dirt from vavle. Close vavle.)
3. Cylinder
4. Regulator/Flowmeter (Make sure the surface is vertical while installing.)
5. Flow Adjust (Typical pressure is 0.05-0.15MPa.)
6. Hose
7. Hose Connection (Connect gas hose between regulator/flowmeter and the unit.)
8. Regulator/Flowmeter heating socket (For low temperature worksite, please plug the regulator/flowmeter to the socket for heating.

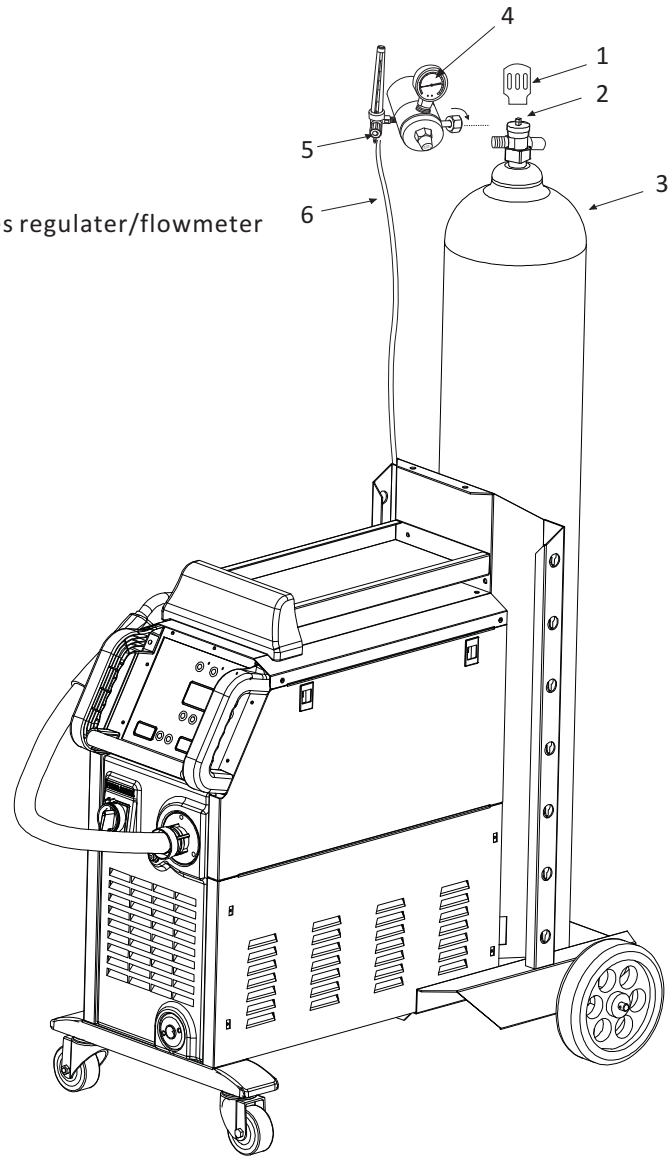

⚠ DO NOT use other gases regulater/flowmeter with CO^2 shielding gas.

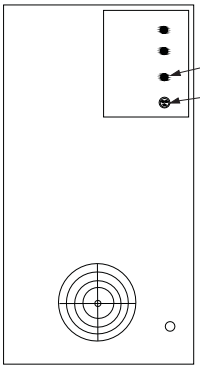

Rear Panel

3.6 Connecting Input Power

1. Input power cord (not less than 6mm^2 copper cord).
2. Over-current protection.
3. Disconnect device line terminals.
4. Ground wire L1/L2 input conductors.

Installation must meet all National and Local Codes. Only qualified persons are allowed to make this installation.

Disconnect and lockout/tagout input power before connecting input conductors from unit.

Select type and size of over-current protection.

Close and secure door on disconnect device. Remove lockout/tagout device, and place switch in the "on" position.

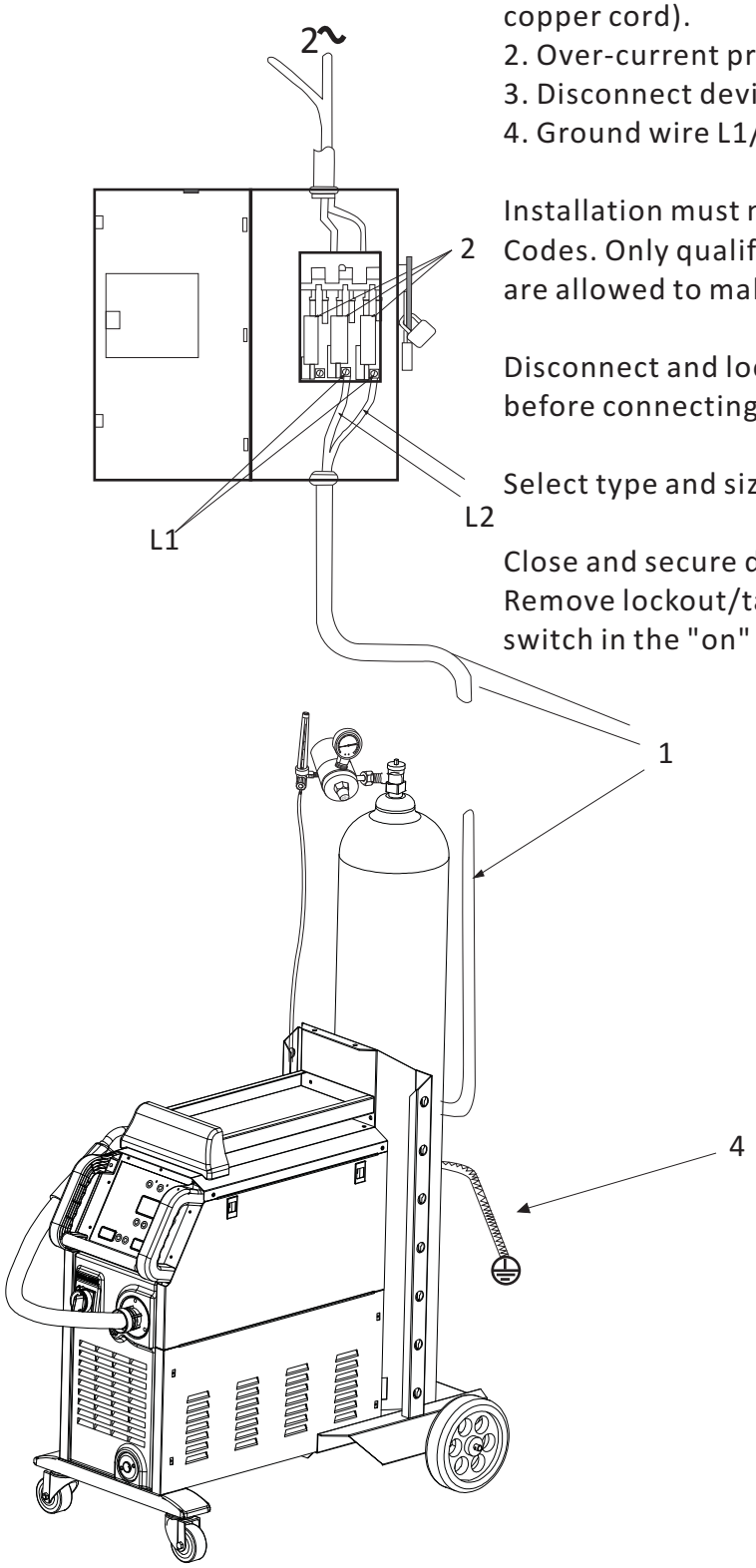

3.7 Threading Welding Wire

1. Wire spool spindle
2. Welding wire
3. Pressure adjustment knob

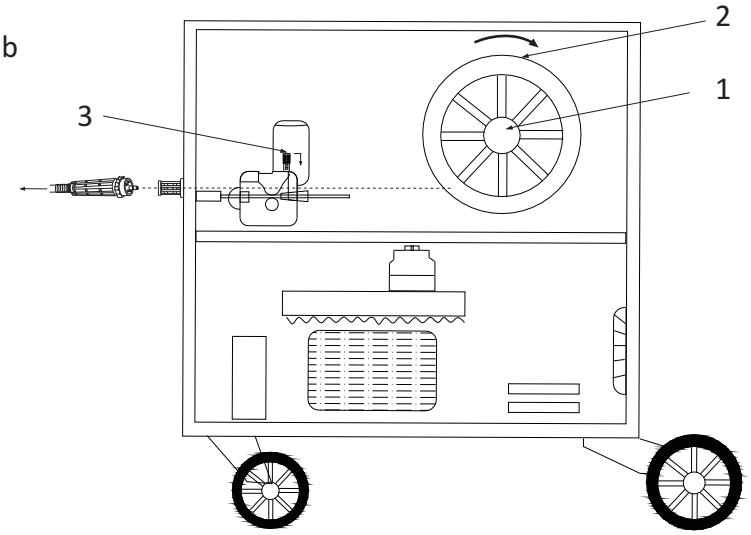

1. Open wire spool spindle; install wire spool; release pressure adjustment knob; pull and hold wire.
Push wire thru guides into drive roll. Close wire spool spindle tightly to prevent slipping (Feed wire to check wire spool installation).
2. Set a desired drive roll pressure, close and tighten pressure adjustment knob.
3. Press gun trigger and let go of wire.
4. Remove gun nozzle and contact tip.
5. Press gun trigger until wire comes out of gun. Reinstall contact tip and nozzle.
6. Feed wire to check drive roll pressure, tighten knob enough to prevent slipping.
7. Cut off wire if welding wire extends too far beyond nozzle.

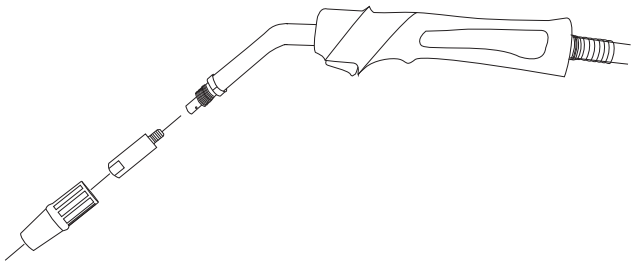

3.8 Changing Drive Roll

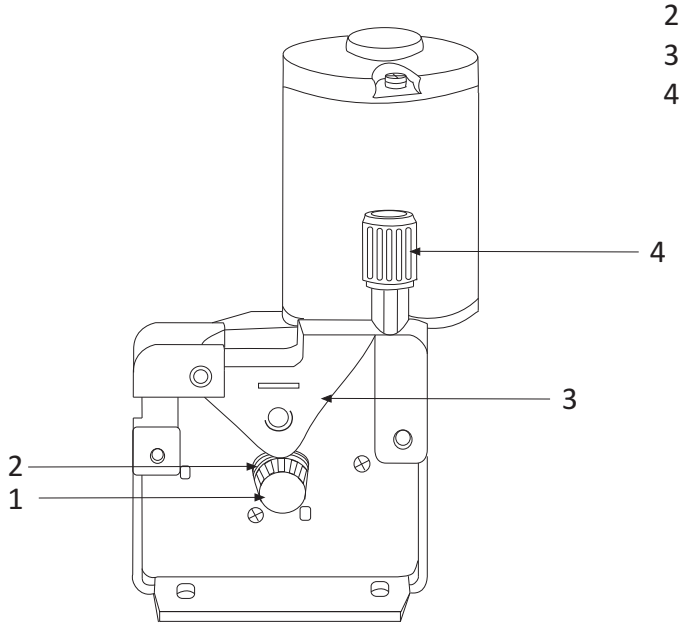

1. Drive roll securing nut
2. Drive roll
3. Pressure adjustment knob
4. Press device

Changing Drive roll:
1. Release pressure adjustment knob. Press wire device springs open.
2. Loosen securing nut, Remove drive roll.
3. The drive roll consists of two different sized grooves. Reinstall the desired wire sized groove close to the motor shaft.
4. Tighten securing nut.
5. Replace press wire device, and set a desired pressure.
6. Make sure drive roll groove lines up with wire guide.

3.9 Typical MIG Process Connection

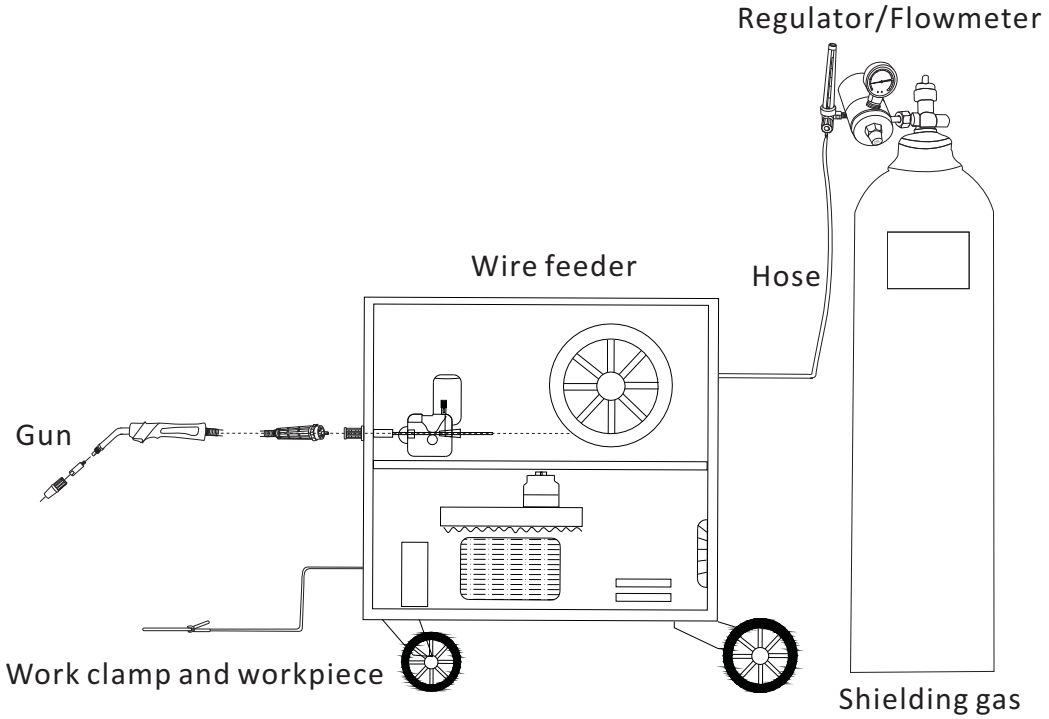

Weld current can damage electronic parts in vehicles. Disconnect both battery cables before welding on a vehicle. Place work clamp as close to the weld as possible.

3.10 Welding Gun

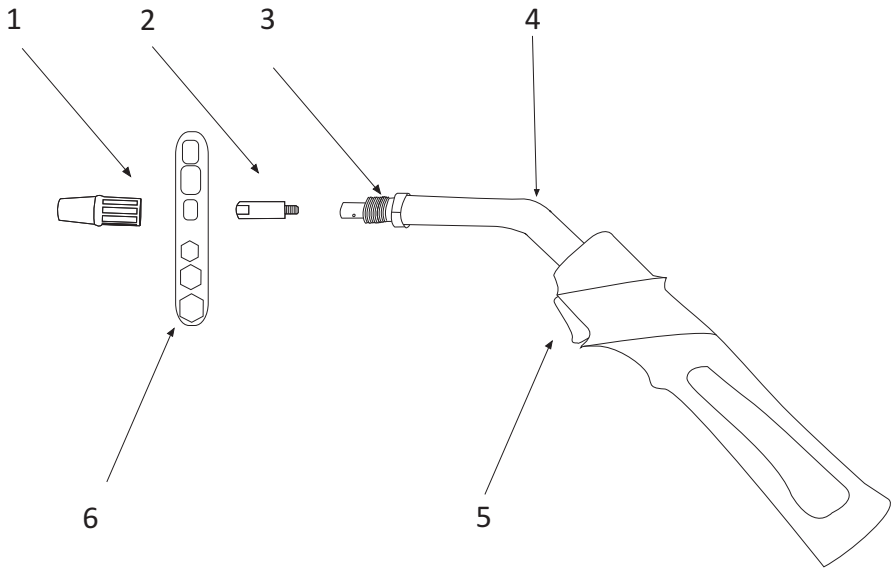

1. Shield cup C012
2. Contact tip C004
3. Front adaptor C010
4. Gooseneck (15/24AK) C020/C018
5. Trigger
6. Spanner

4.OPERATION

4.1 Controls

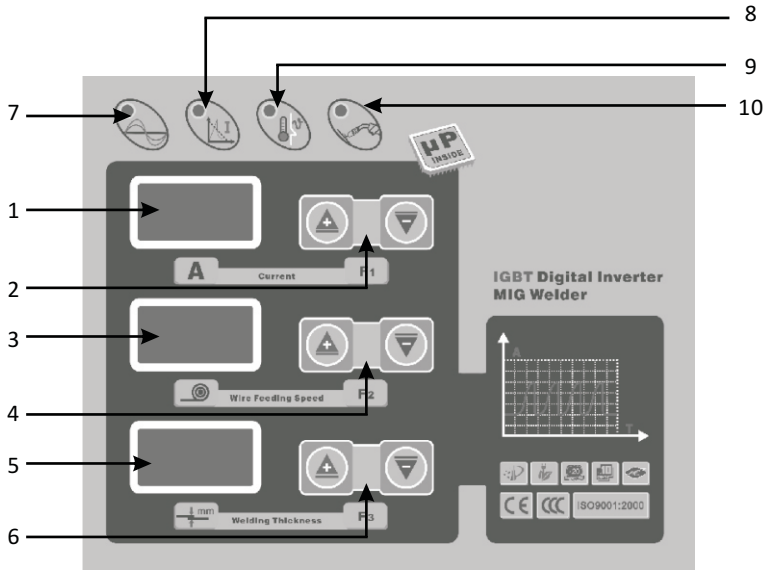

1. Current
2. Current adjustment
3. Wire feeding speed
4. Wire feeding speed adjustment
5. Welding thickness
6. Welding thickness adjustment
7. Undervoltage indicator
8. Overload indicator
9. Overheating indicator
10. Welding indicator

4.2 Holding and Positioning Welding Gun

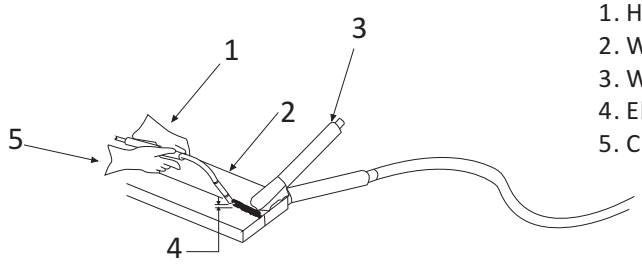

1. Hold gun and control gun trigger
2. Workpiece
3. Work clamp
4. Electrode extension (stickout)
5. Cradle gun and rest hand on workpiece

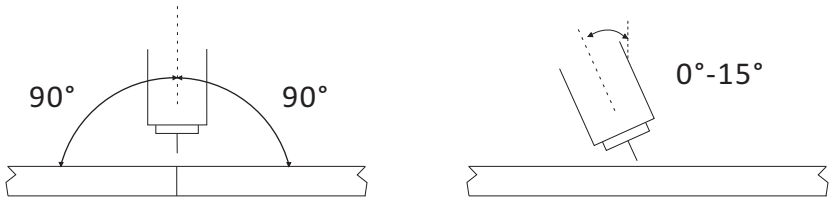

End view of work angle　　Side view of gun angle

GROOVE WELDS

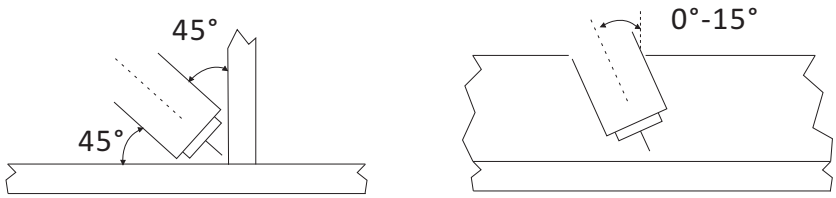

End view of work angle　　Side view of gun angle

FILLET WELDS

Welding wire is energized when gun trigger is pressed. Before lowering helmet and pressing trigger, be sure wire size is correct to past end of contact tip, and tip of wire is positioned correctly on seam.

4.3 Conditions that Affect Weld Bead Shape

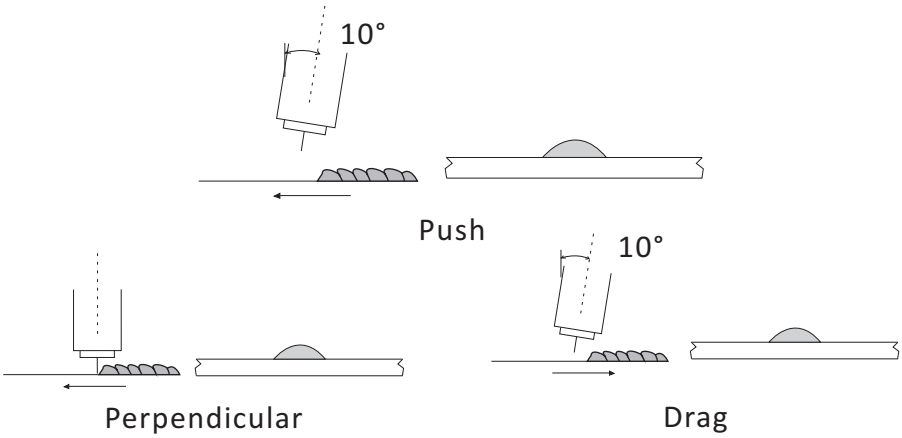

GUN ANGLES AND WELD BEAD PROFILES

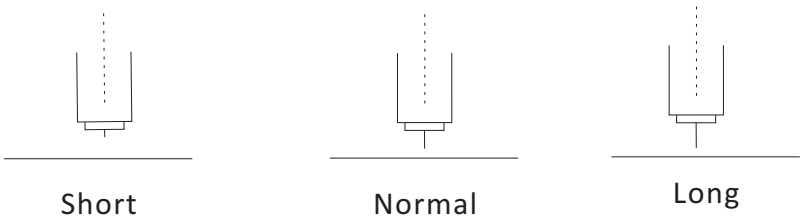

ELECTRODE EXTENSIONS (STICKOUT)

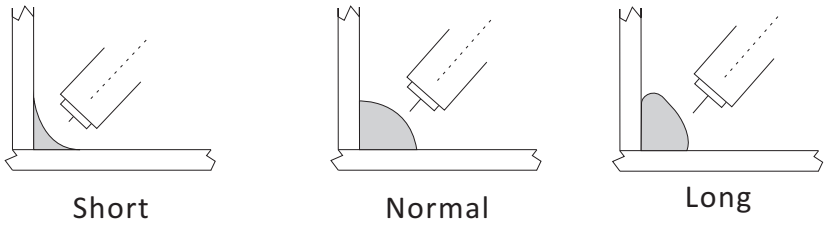

FILLET WELD ELECTRODE EXTENSIONS (STICKOUT)

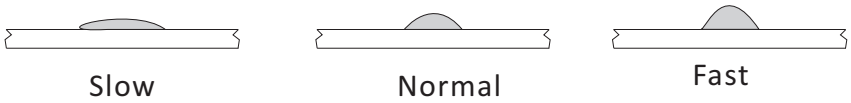

GUN TRAVEL SPEED

Weld bead shape depends on gun angle ,direction of travel, electrode extension (stickout), travel speed, thickness of base metal, wire feed speed (weld current), and voltage.

4.4 Gun Movement during Welding

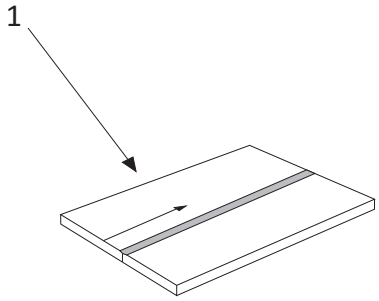

1. Stringer Bead
Steady movement along seam

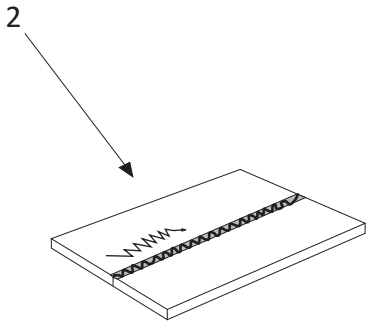

2. Weave Bead
Side to side movement along seam

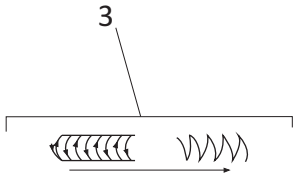

3. Weave Patterns
Use weave patterns to cover a wide area in one pass of the electrode

4.5 Poor Weld Bead Characteristics

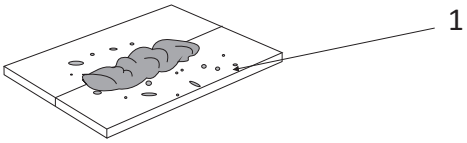

1. Large Spatter Deposits

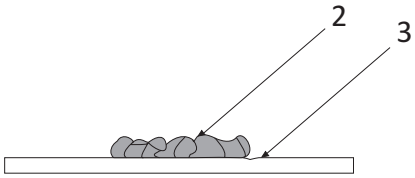

2. Rough, Uneven Bead
3. Slight Crater during Welding

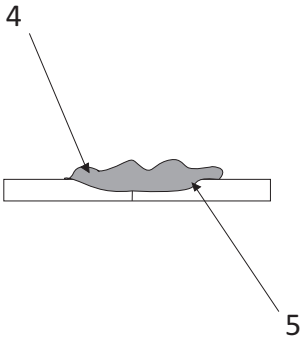

4. Bad Overlap
5. Poor Penetration

4.6 Good Weld Bead Characteristics

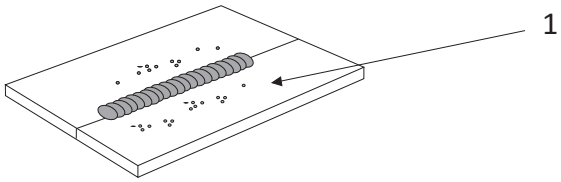

1. Fine Spatter

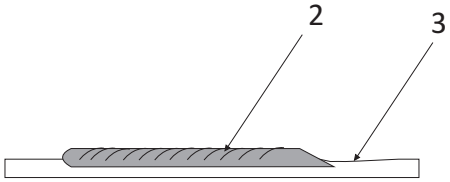

2. Uniform Bead
3. Moderate Crater during Welding

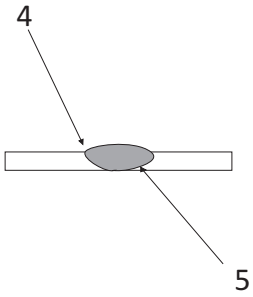

4. No Overlap
5. Good Penetration into Base Metal

5.1 Excessive Spatter

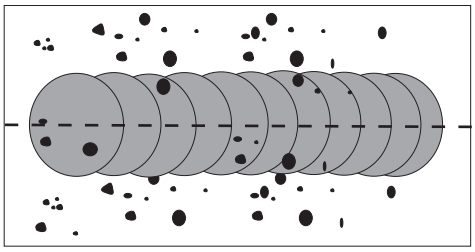

Scattering of molten metal particles that cool to solid form near weld bead.

Possible Causes	Corrective Actions
Wire feed too high	Select lower wire feed speed
Voltage too high	Select lower voltage range
Electrode extension (stickout) too long	Use shorter electrode extension (stickout)
Workpiece dirty	Remove all grease, oil, moisture, rust paint under coating, and dirt from surface, before welding
Insufficient shielding gas at welding arc	Increase flow of shielding gas at regulator/flowmeter and/or prevent drafts near welding arc
Dirty welding wire	Use clean, dry welding wire
	Eliminate pickup of oil or lubricant on welding wire from feeder or liner

5.2 Porosity

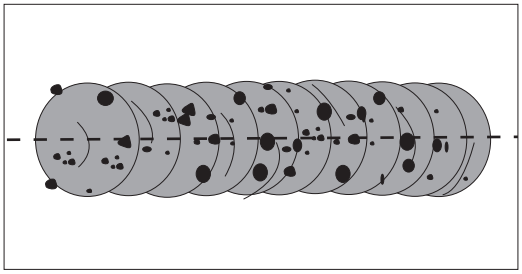

Small cavities or holes resulting from gas pockets in weld metal.

Possible Causes	Corrective Actions
Insufficient shielding gas at welding arc	Increase flow of shielding gas at regulator/flowmeter and/or prevent drafts near welding arc
	Remove spatter from gun nozzle
	Check gas hoses for leaks
	Adjust nozzle distance from workpiece
	Hold gun near bead at end of weld until molten metal solidifies
Wrong gas	Use welding grade shielding gas, change to different gas
Dirty welding wire	Use clean, dry welding wire
	Eliminate pick up of oil or lubricant on welding wire from feeder or liner
Workpiece dirty	Remove all grease, oil, moisture, rust paint under coating, and dirt from surface, before welding
	Use a more highly deoxidizing welding wire (contact supplier)
Welding wire extends too far out of nozzle	Do not extend wire too far beyond nozzle

5.3 Excessive Penetration

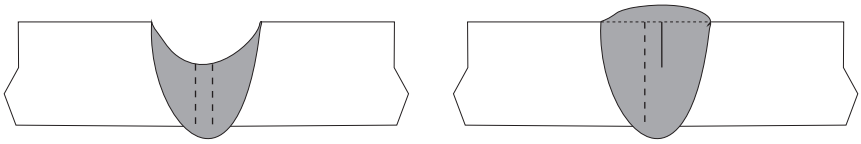

Excessive Penetration Good Penetration

Weld metal melting through base metal and hanging underneath weld.

Possible Causes	Corrective Actions
Excessive heat input	Select lower voltage range and reduce wire feed speed
	Increase travel speed

5.4 Lack of Penetration

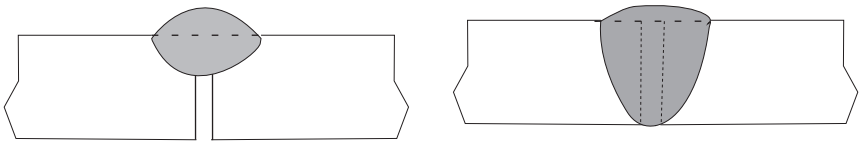

Lack of Penetration Good Penetration

Shall fusion between weld metal and base metal.

Possible Causes	Corrective Actions
Improper joint preparation	Material too thick. Joint preparation and design must provide access to bottom of groove while maintaining proper welding wire extension and arc characteristic
Improper weld technique	Maintain normal gun angle of 0 to 15 degrees to achieve maximum penetration
	Keep arc on leading edge of weld puddle
	Do not extend wire too far from nozzle
Insufficient heat input	Select higher wire feed speed and/or select higher voltage range
	Reduce travel speed

5.5 Incomplete Fusion

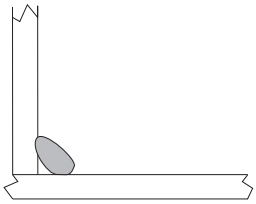

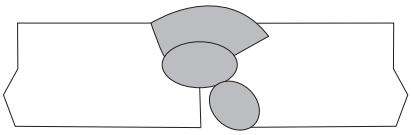

Failure of weld metal to fuse completely with base metal or a preceeding weld bead.

Possible Causes	Corrective Actions
Improper joint preparation	Remove all grease, oil, moisture, rust paint under coating, and dirt from surface, before welding
Improper weld technique	Select higher voltage range and/or adjust wire feed speed
Insufficient heat input	Place stringer bead in proper locations at joint during welding
	Adjust work angle or widen groove to access bottom during welding
	Momentarily hold arc on groove side walls when using weaving technique
	Keep arc on leading edge of weld puddle
	Use correct gun angle of 0 to 15 degrees

5.6 Burn Through

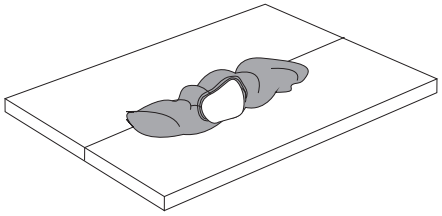

Weld metal melting completely through base metal resulting in holes where no metal remains.

Possible Causes	Corrective Actions
Excessive heat input	Select lower voltage range and reduce wire feed speed
	Increase and/or maintain steady travel speed

5.7 Waviness of Bead

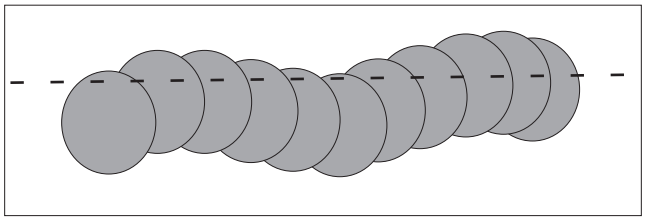

Weld metal that is not parallel and does not cover joint formed by base metal.

Possible Causes	Corrective Actions
Welding wire extends too far out of nozzle	Do not extend wire too far from nozzle
Unsteady hand	Support hand on solid surface or use two hands

5.8 Distortion

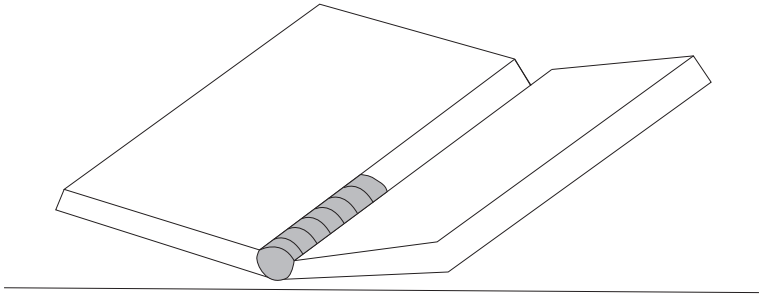

Contraction of weld metal during welding that forces base metal to move.

Possible Causes	Corrective Actions
Excessive heat input	Use restraint (clamp) to hold base metal in position
	Make tack welds along joint before starting welding operation
	Select lower voltage range and/or reduce wire feed speed
	Increase travel speed
	Weld in small segments and allow cooling between welds

5.9 Other Troubleshooting

Problem	Probable Cause	Remedy
Arc can not weld Incomplete fusion	1. Not enough power phase 2. Too low welding voltage	1. Check power source 2. Select higher voltage range
No wire feed	1. Drive roll groove does not line up with wire guide 2. Obstruction in wire guide 3. Drive roll pressure too high 4. Incorrect wire size 5. Obstruction in wire inlet guide or contact tip 6. Dirty or bad quantity welding wire 7. Press wire device pressure too low	1. Aligning drive roll and wire guide 2. Clear obstruction in wire guide or replace it if necessary 3. Readjust drive roll pressure 4. Replace wire or wire guide 5. Clear obstruction in gun contact tip or liner 6. Use good quantity welding wire 7. Readjust screws
Excessive spatter	1. Wire feed speed too high 2. Contact tip damaged	1. Select lower wire feed speed 2. Replace contact tip
Small cavities or holes resulting from gas pockets in weld metal	1. Insufficient shielding gas at welding arc 2. Regulator/flowmeter damaged 3. Contact tip damaged 4. Leakage, outside gas mix with shielding gas	1. Increase flow of shielding gas at regulator/flowmeter 2. Replace regulator/flowmeter 3. Replace contact tip 4. Check gas hoses for leaks
Welding are not stable	1. Welding wire dirty 2. Bad contact of work clamp 3. Wrong size gun liner or contact tip, or contact tip worn	1. Use clean, dry welding wire 2. Connect work clamp to get good to metal as contact 3. Replace contact tip
Low or unstable wire speed	1. Distorted welding wire 2. Obstruction in gun contact tip or liner	1. Eliminate pickup of distorted welding wire from feeder or liner, or readjust drive roll pressure 2. Replace contact tip or liner
No weld output	1. Main transformer overheats, overheat protection working 2. Fuse broken 3. Gun trigger damaged or plug worn	1. Wait 15-30 mins for unit to cool 2. Replace fuse 3. Replace gun trigger or plug